MTE 481 - FINAL DESIGN PRESENTATION

10/22/2025

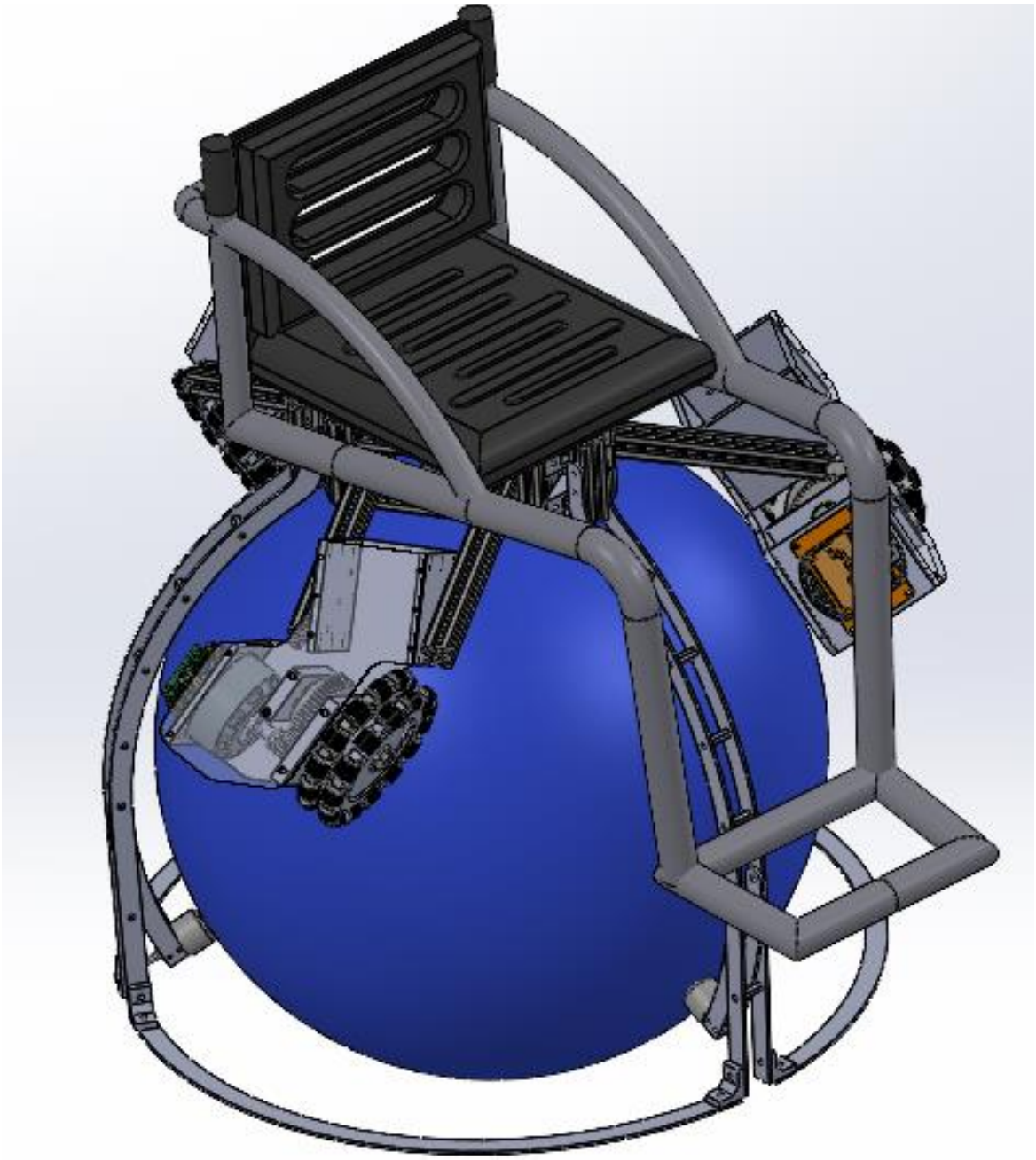

Capstone Group 52

Chanuth Weeraratna, Samuel Mpoloka, Adesh Partap Singh, Joseph Bagheri, Ameen Aydan

UNIVERSITY OF WATERLOO

REFRESH - NEEDS IDENTIFICATION

Factually:

- Wheelchair users engaged in day-to-day tasks are fundamentally limited by the need to use their hands for both propulsion and steering. → **Hand accessibility**
- "Building up through repetition" loads the shoulders in ways it was never optimized to bear over years. (Barry Mason, 2020) → **Prevalence of injury**
- Those playing sports more than 1×/week had 75.7% occurrence of rotator cuff tears, vs. 36.3% in non-sport users. (Michael Akbar, 2015) → **Major barrier to participation**

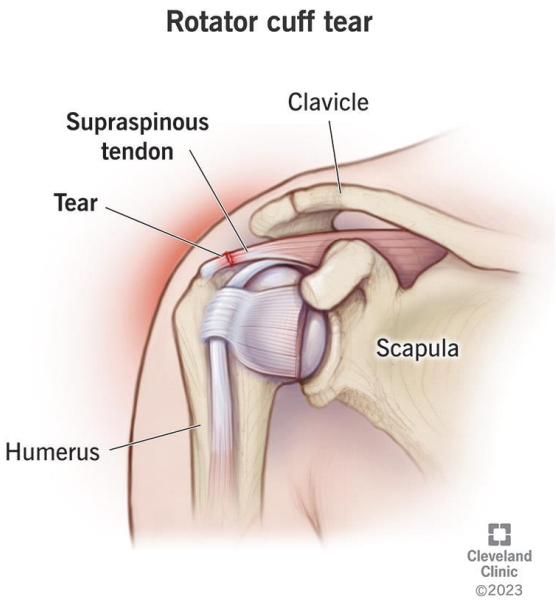

Anecdotally:

- **Adrit Batra** from Laurier enjoys street hockey as a hobby but finds that his arms frequently fatigue and the difficulty of single handed manipulation creates a steep learning curve.
- UWaterloo baseball operations coordinator **Brody Daigneau** finds that physical limitations not only affect performance, but also discourage play with non-impaired individuals, widening the inclusion gap.

NEEDS STATEMENT

There is a need for a **hands-free mobility** device for wheelchair sports to **prevent overuse injuries** and **reduce the learning curve**, making recreational sports more **accessible**.

PROBLEM DEFINITION

- **Hands-free** propelling and steering while handling objects during gameplay.
- Working with the CAPACITY initiative to bring this hands-free wheelchair to PAC where it can be used for drop-in gameplay on campus.
- Focused on use in basketball to limit variables in design.

Object of Interaction	Environment
• Standard basketball • 50th to 90th percentile anthropometric human	• Basketball court • Flat, level, smooth surface • Good friction coefficient

USER REQUIREMENTS

Vague, non-measurable requirements

- **Human-machine interface doesn't require input from the hands or arms**
- **Operation doesn't interfere with gameplay**
  - **E.g. the user takes their eyes off the ball**
- **Control accounts for a varying range of disabilities**
  - **Cannot accommodate limited trunk control (class 1.0 -2.0 level disability).**
- **Operation is simple and intuitive**
  - **Including user control sensitivity adjustment**
- **Wheelchair is safe for the user and those around them**
  - **Failsafe measures**
  - **Speed limiter**
  - **Passive and/or active protection from collisions**
  - **Emergency stop**

Engineering Requirements – Criteria Table

#	Criterion	Constraint	Objective
1	Weight Capacity	80kg	110kg
2	Footprint Radius	60cm	40cm
3	Max Linear Speed (in all directions)	2.3 m/s	4.5 m/s
3	Max Linear Acceleration (in all directions)	0.7 $\frac{m}{s^2}$	1.3 $\frac{m}{s^2}$
4	Turning Time	-	180 degrees in 1 sec
5	Seat Height (Footrest to seat)	50 ± 10cm	-
6	Total Operating Time	12mins	40mins

Critical Geometry

Alpha (α)

- Positive from the z-axis counter clockwise (CCW), related to position above equator.
- Greater $\boldsymbol{\alpha}$ increases normal force = increase friction

$$N = \frac{m_b g}{3\cos(\boldsymbol{\alpha})}$$

- Reduces COM height relative to sphere center, less torque input on sphere
- Limited by OW load constraint and weight capacity spec: $N_{ow} \approx 60kg$ at $m_b = 92kg, \alpha =$ 60 deg.

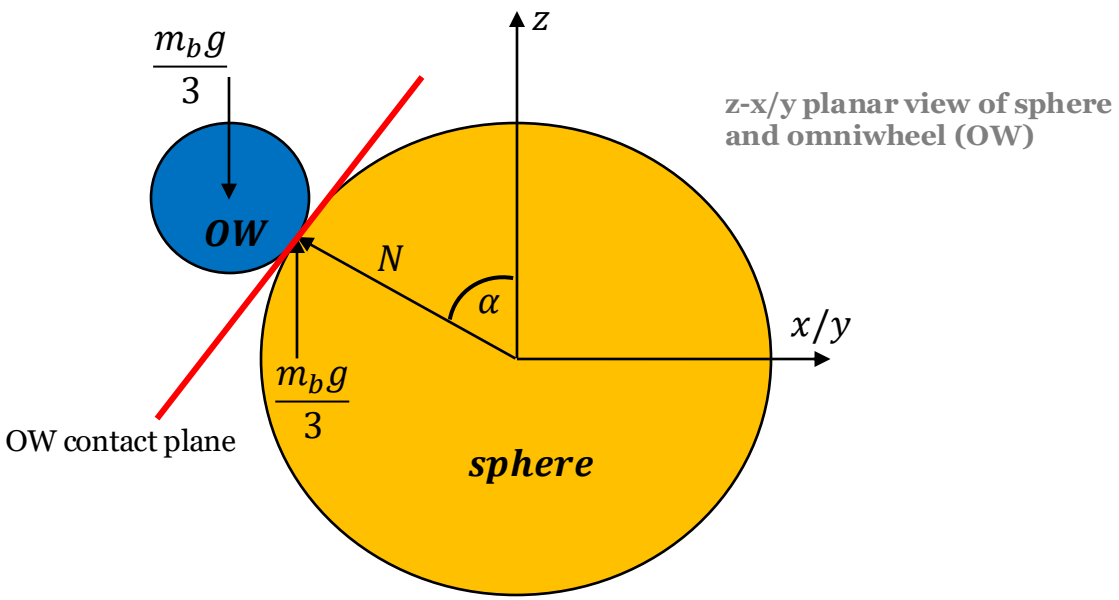

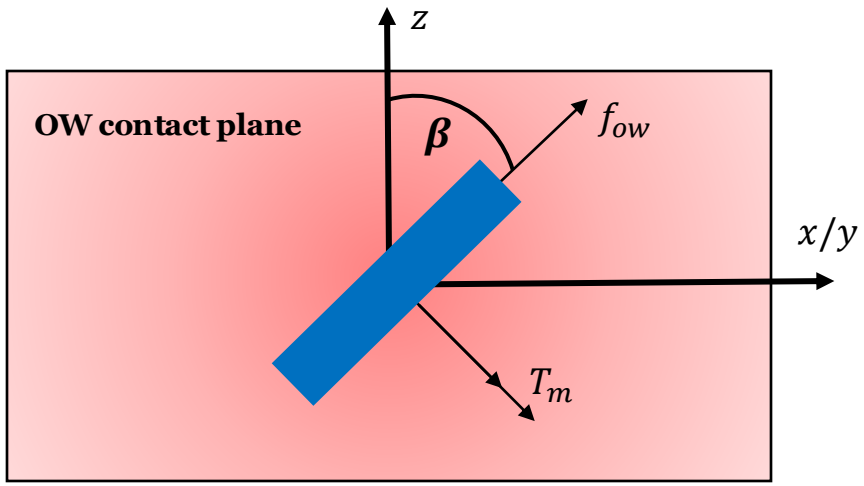

Beta (β)

- $\beta = 0°$ gives best x-y translation (resultant sits in friction cone), but can't rotate platform body.
- At $\alpha = 60° \rightarrow \beta \approx 42°$ so OW are in mutually orthogonal planes. Most efficient orientation because no backdriving
- Set $\beta = 30°$ to satisfy turning time (T_z) and translation spec (T_x, T_y) while maximizing efficiency.

UNIVERSITY OF WATERLOO

Transmission Specifications

Wheel Torque and Speed Modelling

- Wheeled inverse pendulum model taken in the z-x and z-y planes, linearized about sphere centre ($\theta_b \geq 15\,°$).
  - Ode45() function MATLAB to find inverse dynamics with eqn (1) and (2) (desired motion → torque at sphere centre along certain plane)
- Sphere acceleration, velocity and direction mapped to torque, angular velocity components in sphere centre, mapped to torque and speed requirements at wheel, eqn (3) and (4). Note: T_w is transposed for wheel speed conversion matrix.
- Turning time is simple torque about z, T_z and inertia of body about z (relatively low requirements, beta didn't need to be extreme)

$$M\ddot{x} + m_b l\ddot{\theta} = \frac{T_s}{r_s} \quad (1)$$

$$m_b g l\theta - (I_b + m_b l^2)\ddot{\theta} - m_b l\ddot{x} = T_s \quad (2)$$

$$\begin{pmatrix} \tau_x \\ \tau_y \\ \tau_z \end{pmatrix} = \frac{r_b}{r_w}\sum_{i=1}^{3} \boldsymbol{\tau}^i = \frac{r_b}{r_w}\left(\hat{\mathbf{w}}^1 \middle| \hat{\mathbf{w}}^2 \middle| \hat{\mathbf{w}}^3\right)\begin{pmatrix} \tau_1 \\ \tau_2 \\ \tau_3 \end{pmatrix} \quad (3)$$

$$T_w = (\hat{\mathbf{w}}^1 | \hat{\mathbf{w}}^2 | \hat{\mathbf{w}}^3), \quad (4)$$

	Speed (rad/s)	Torque($N.m.$)
OW requirement	55	13
M8325s 100KV	218	3.3

Motor Spec

- Max wheel torque and speed extracted for linear acceleration, linear velocity and turning speed specs.
- Cont. and within linear T-w region → 1:4 speed red.

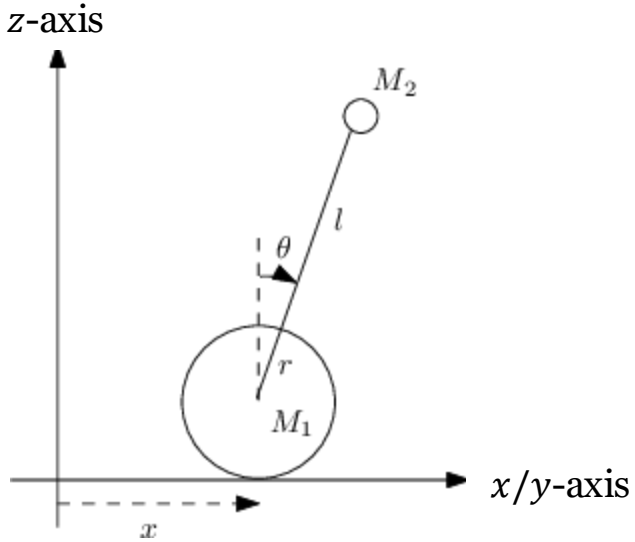

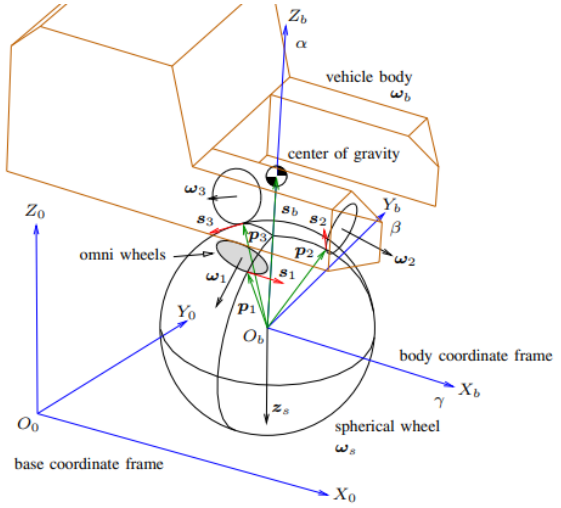

UNIVERSITY OF WATERLOO

Mechanical Design

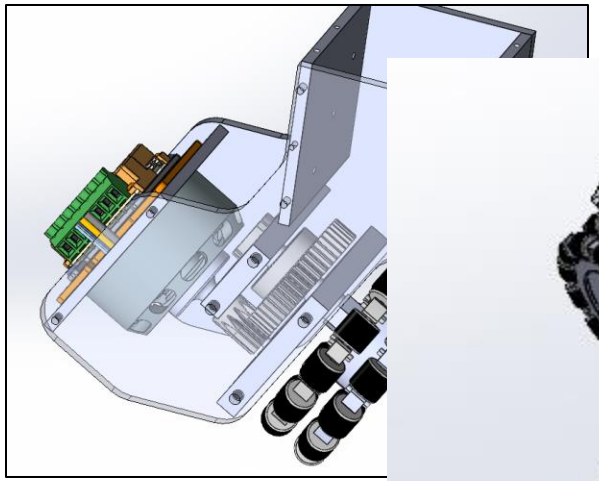

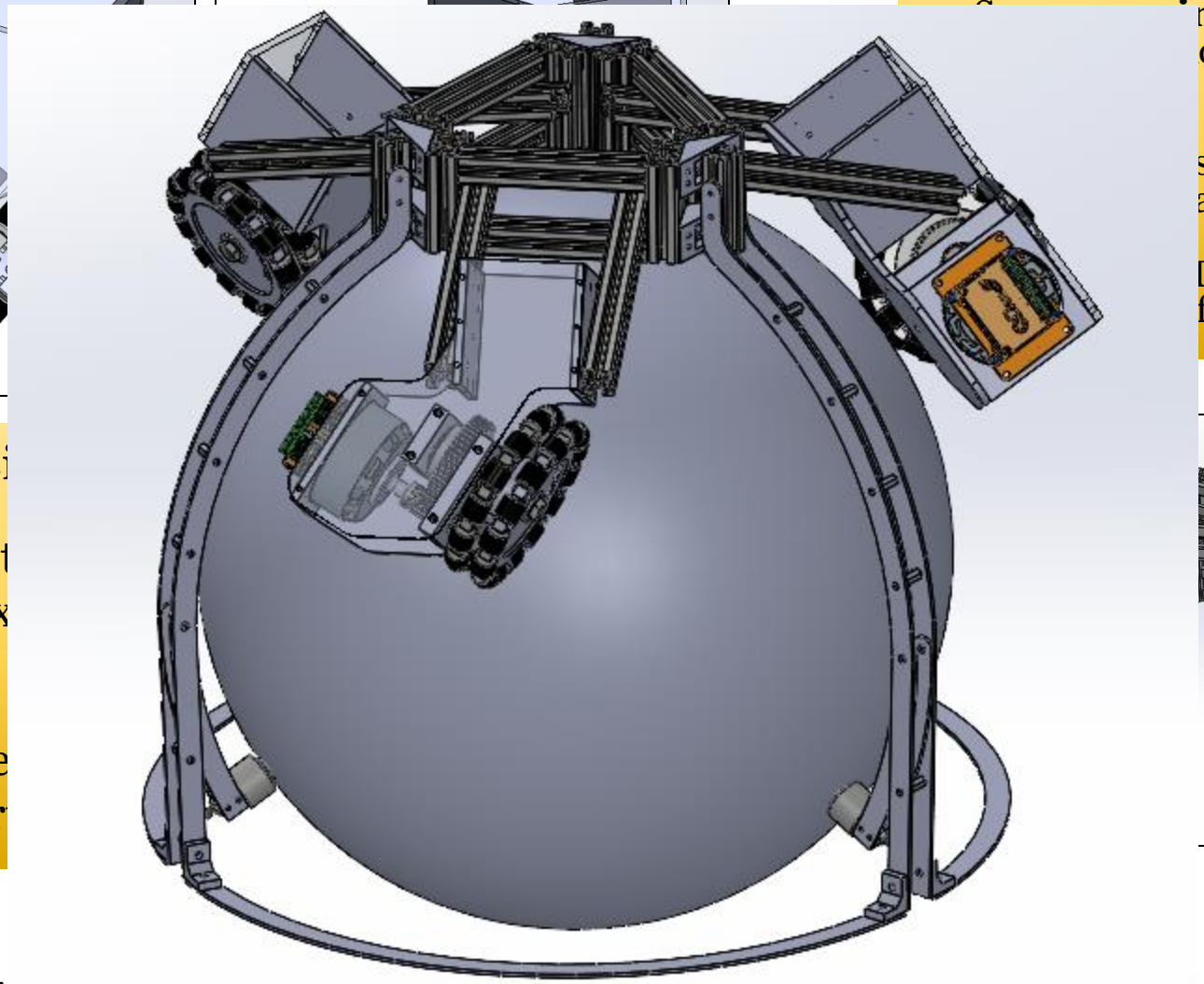

Transmission Assembly

mple, cheap, compact, back
od = 1.5, 1045 carbon, $T_{\max} = 9Nm$

s, 15mm diameter output shaft
able radial load, torsion/bending.

D printed cowling to avoid FOD
for batteries (100x40x30mm)

Segmented Chassi

- 25 mm, solid T-slot
  to double 25mm ex
  deflection >1mm
- 3 segments attache
  Gusset also suppor

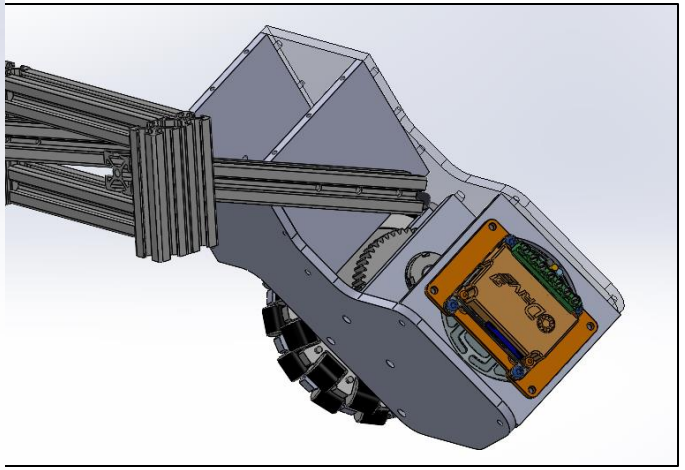

UNIVERSITY OF WATERLOO

Mechanical Design

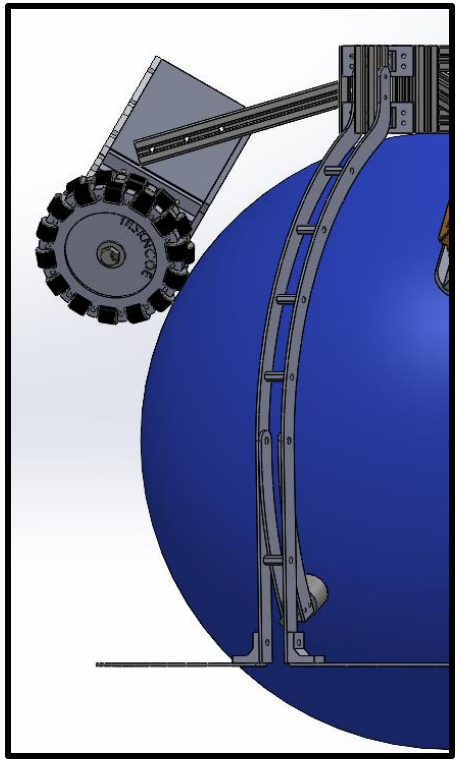

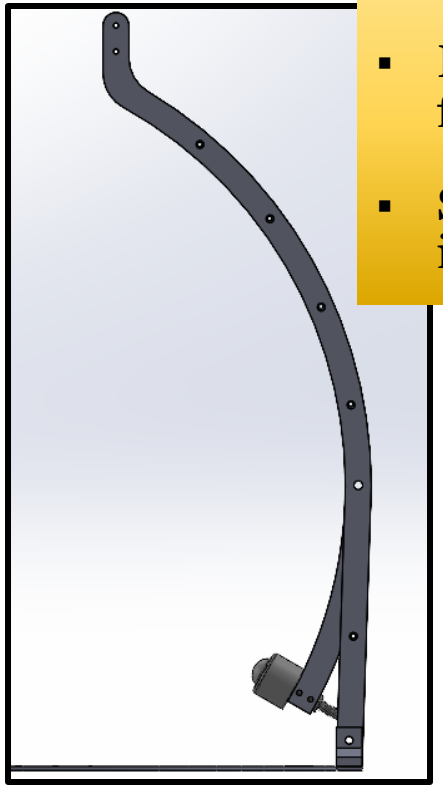

Safety Segment

- Ball arrestor prevents platform from lifting off. Spring not shown
- Safety ring limits **tilt angle to 15°** in all directions.

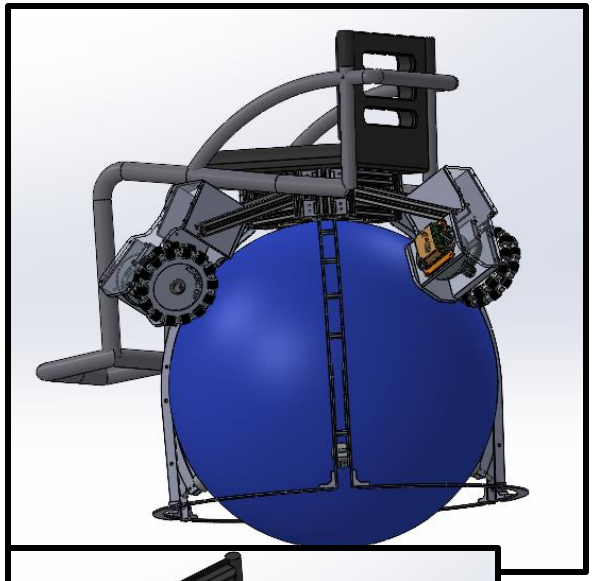

Chair

- Frame to be adapted from a basketball wheelchair.
- Meets foot rest requirement.
- Electronics to be mounted below seat. IMU sits on 3D plate to ensure planar accuracy.

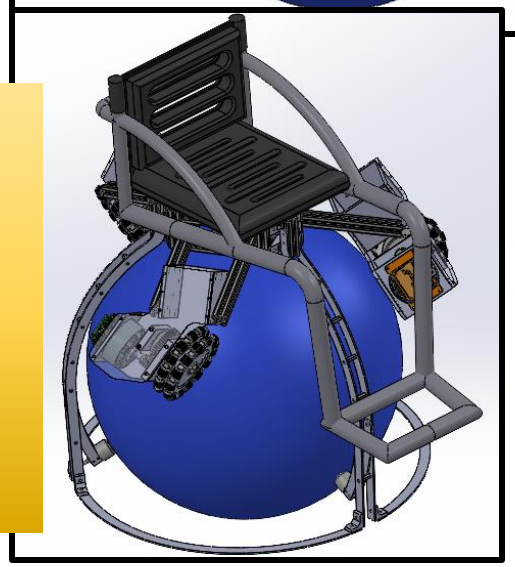

Mechanical Design

Friction concerns

- Ball is made of polyethylene and OW rollers are PU.
- Both are known to posses low friction coefficients w.r.t. other materials
- Coat ball surface with SBR sheet using hexagon and pentagon segments. Like a soccer ball!

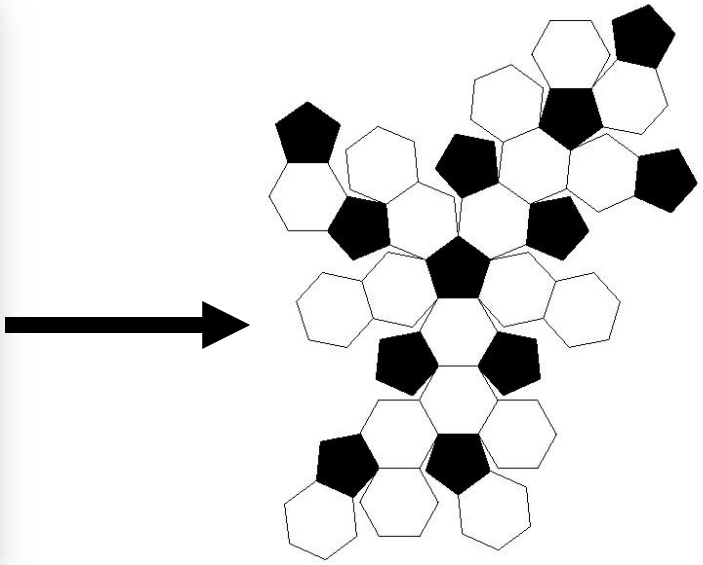

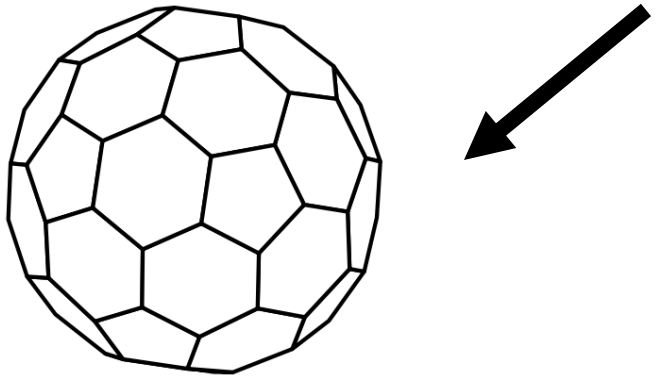

UNIVERSITY OF WATERLOO

Electrical System

Subsystem	Parts Included	Function
Power System	Batteries, Fuses, Relays, Volt/Ammeter, E-Stop	High-current power + safety
Motor Control	ODrive S1, M8325 Motors, Encoders	High-current power + safety
CAN Network	Transceiver, Bus Wiring, Termination	Communication backbone
MCU	Teensy 4.1 + Power	Central controller for LQR + system logic
IMU	BNO086 Sensors	User-lean + state estimation

High-Level Block Diagram

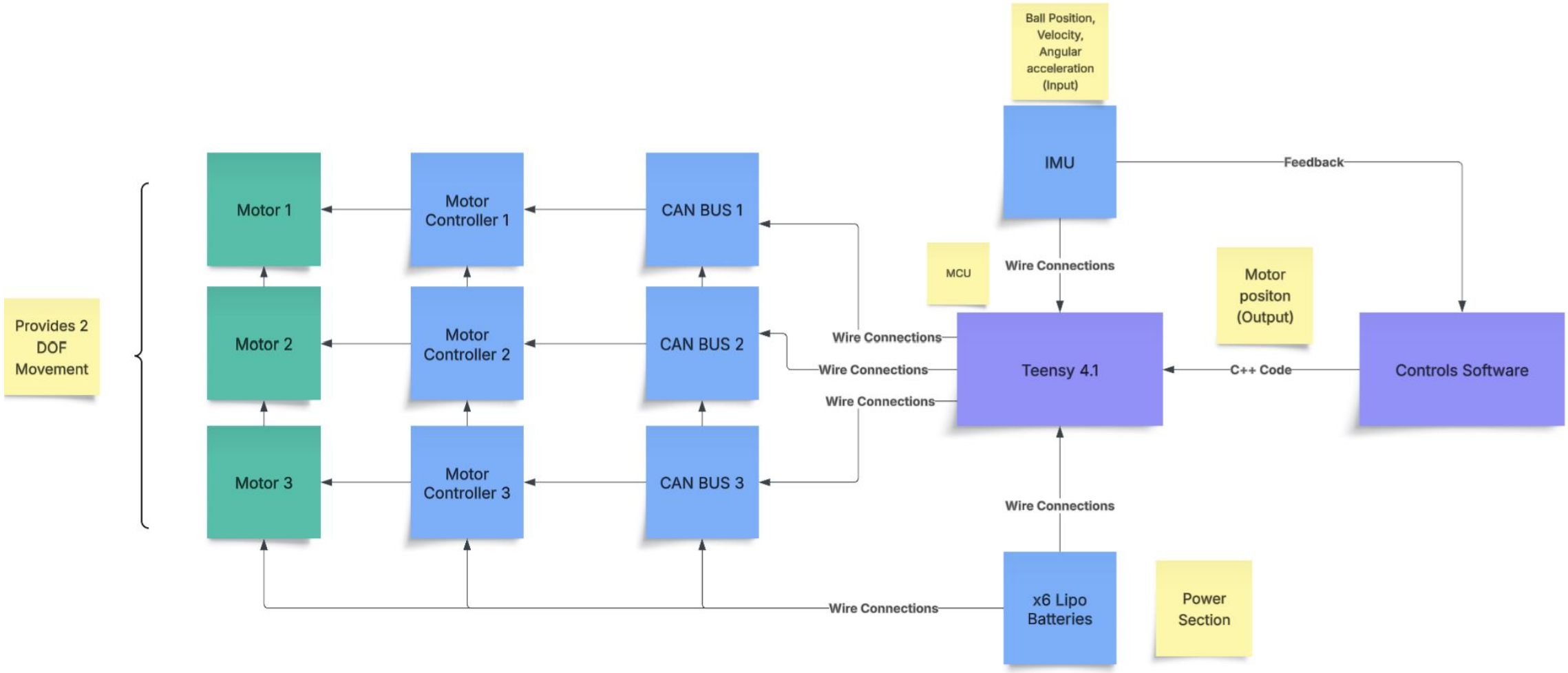

UNIVERSITY OF WATERLOO

System Architecture

Electrical System Design Choices

- LiPo batteries arranged in 2-in-series pairs
- Safety System: Relay, Precharge circuitry, fuses, Estop
- Sensor Redundancy

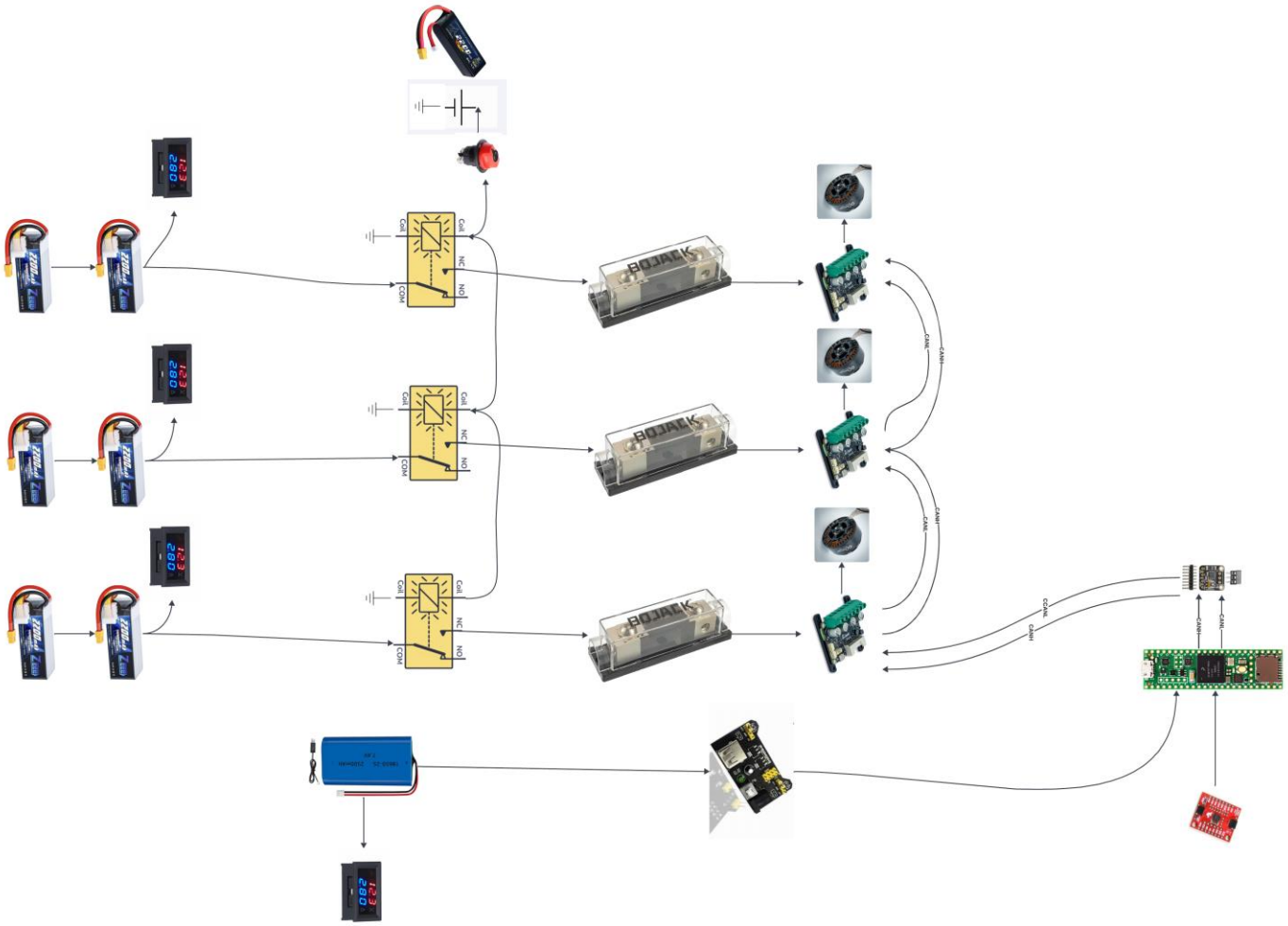

UNIVERSITY OF WATERLOO

Operating Time

Given:

- $K_t = 0.083 \frac{Nm}{A}$
- $\tau_{max} = 3.3\ Nm$
- $\omega_{max} = 2A = 2\pi \times 30 = 188.5 \frac{\text{rad}}{\text{s}}$
- $R_{phase} = 0.024\ \Omega$
- $\eta_{motor} = 85\ \%$
- $V_{batt\ pack} 44.4V$
- $C = 2.2\ Ah$

Power Calculations

$$I = \frac{\tau_{max}}{K_t} = 39.8\ \text{A} \cong 40\ A$$
$$P_{mech} = \tau_{max} \times \omega_{max} = 622\ W$$
$$P_{cu} = I^2 \times R = 40^2 \times 0.024 = 38\ W$$
$$P_{total} = P_{mech} + P_{cu} = 660\ W$$
$$\eta_{motor} = P_{total}/P_{in}$$
$$P_{in} = P_{total}\ /\eta_{motor} = 660/0.85 = 776\ \text{W}$$

Operating Time

$$V_{batt\ pack} = 44.4V$$
$$C = 2.2\ Ah$$
$$E = V_{batt\ pack} \times C = 44.4 \times 2.2 = 98\ Wh$$
$$t = E/\ P_{in} = 98/776 = 0.126\ \text{h}$$
$$t = 0.126 \times 60 = 7.56\ mins$$

UNIVERSITY OF WATERLOO

Wiring

- **Logic Power:** The Teensy microcontroller supplies **3.3V and GND** to power the CAN transceiver module.
- **Signal Interface:** Teensy **TX/RX pins** transmit single-ended UART commands to the transceiver chip.
- **Protocol Conversion:** The transceiver converts these logic signals into **Differential CAN** (CAN High & CAN Low) for robust data transmission.
- **Controller Input:** The differential CAN lines connect directly to the **ODrive S1**'s dedicated communication port.
- **Hardware Integration:** The ODrive S1 is mounted directly to the motor backplate, eliminating the need for external phase wiring.

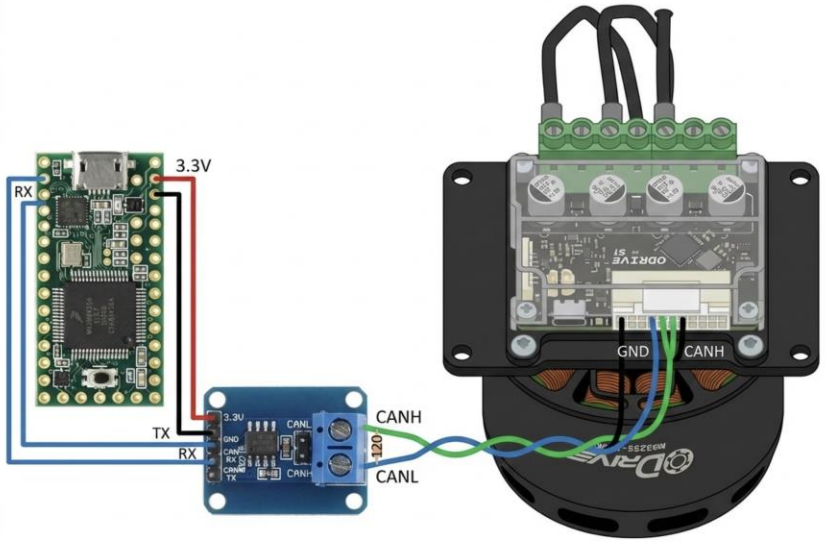

Testing

- **Hardware Integration:** Successfully integrated the M8325 Brushless DC motor with the ODrive Pro motor controller for high-precision actuation.
- **Communication Protocol:** Established a UART serial interface between the Arduino microcontroller and ODrive for real-time command transmission.
- **Configuration:** Calibrated motor parameters (current limits and velocity gains) using the ODrive GUI prior to embedded deployment.
- **Power Verification:** Validated system performance under load using a 14.5V lab bench power supply configuration.
- **Functional Testing:** Confirmed successful motor states (Idle, Closed-Loop Control) and position targeting via Arduino commands.

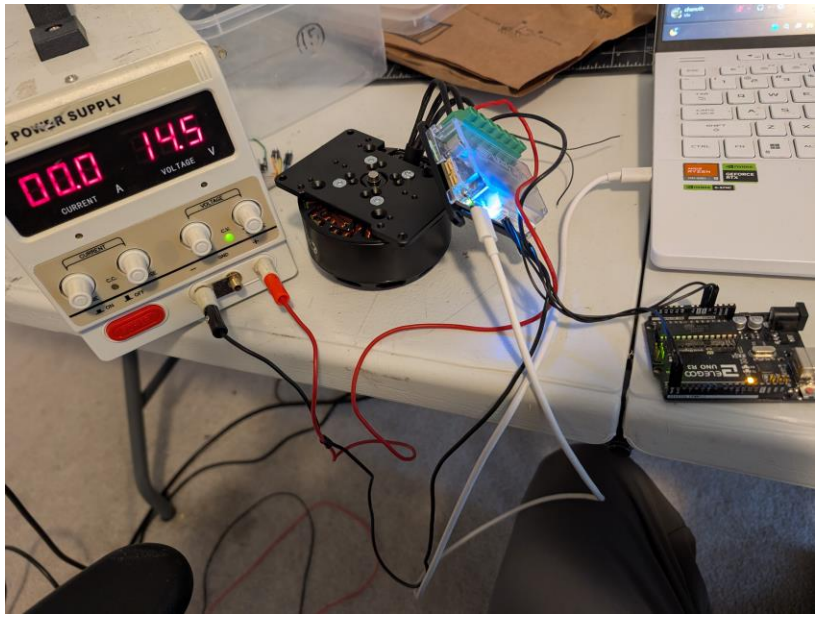

UNIVERSITY OF WATERLOO

Next steps for Electrical setup

- **Architecture Migration:** Transition from UART to **CAN Bus** communication to enable robust, high-speed daisy-chaining of three independent ODrive motor nodes.
- **Processor Upgrade:** Replace the Arduino with a **Teensy 4.1** to leverage its native CAN support and higher processing speed for low-latency multi-axis coordination.
- **State Estimation:** Integrate a 6-DOF **IMU** (via I2C/SPI) to provide real-time orientation feedback and system state data to the main controller.
- **Control Logic:** Implement a closed-loop **PID algorithm** on the Teensy that maps IMU orientation error to counter-active torque commands for dynamic stabilization.
- **System Scaling:** Scale the electrical subsystem to support simultaneous current draw for all three M8325 motors while maintaining signal integrity.

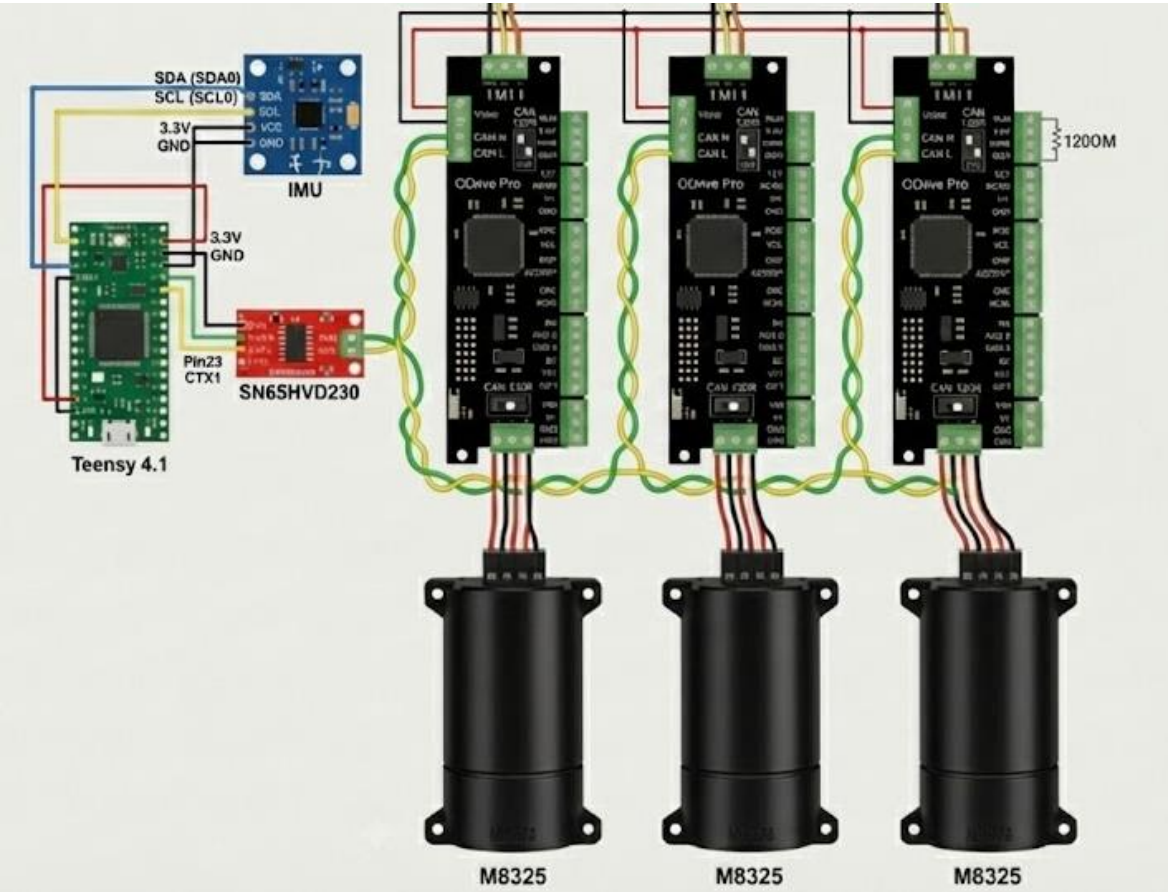

UNIVERSITY OF WATERLOO

Controls Design

Goal:

- Achieve intuitive, real-time control based on the user's lean, mirroring the seamless motion of a Segway.

The Core Problem:

- Achieve intuitive, real-time control based on the user's lean, mirroring the seamless motion of a Segway.

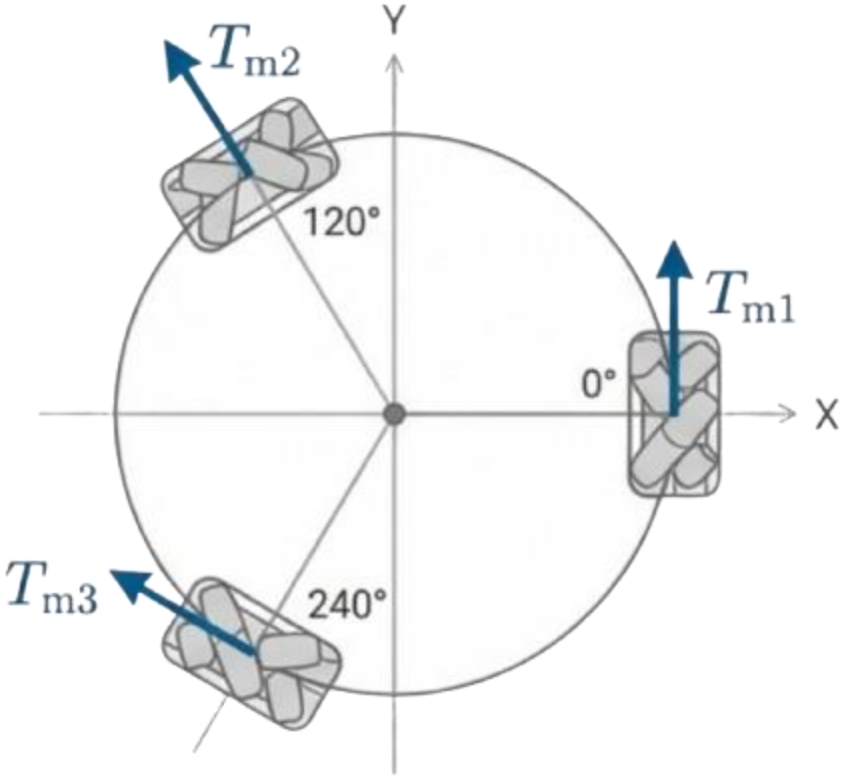

UNIVERSITY OF WATERLOO

From Physics to Formulas: Modeling Our System Plant

$$T_s = \underbrace{\begin{bmatrix} T_x \\ T_y \\ T_z \end{bmatrix}}_{\text{Resultant Sphere Torque}} = \underbrace{\boxed{\begin{bmatrix} T_{s_m1} & T_{s_m2} & T_{s_m3} \\ T_{s_m1} & T_{s_m2} & T_{s_m3} \\ T_{s_m1} & T_{s_m2} & T_{s_m3} \end{bmatrix}}}_{\text{The Translation Matrix}} * \underbrace{\begin{bmatrix} T_{m1} \\ T_{m2} \\ T_{m3} \end{bmatrix}}_{\text{Individual Motor Torques}} \cdot T_m$$

- A precise model is essential for designing a controller that performs predictably.
- We translated the system's physics into a state-space representation using MATLAB.
- This matrix translates individual motor torques into a net torque on the sphere, forming the core of our dynamic model.

Key Assumptions: - 100% motor efficiency. - No-slip contact between omni-wheels and sphere.

State-Space Controller for Optimal Performance

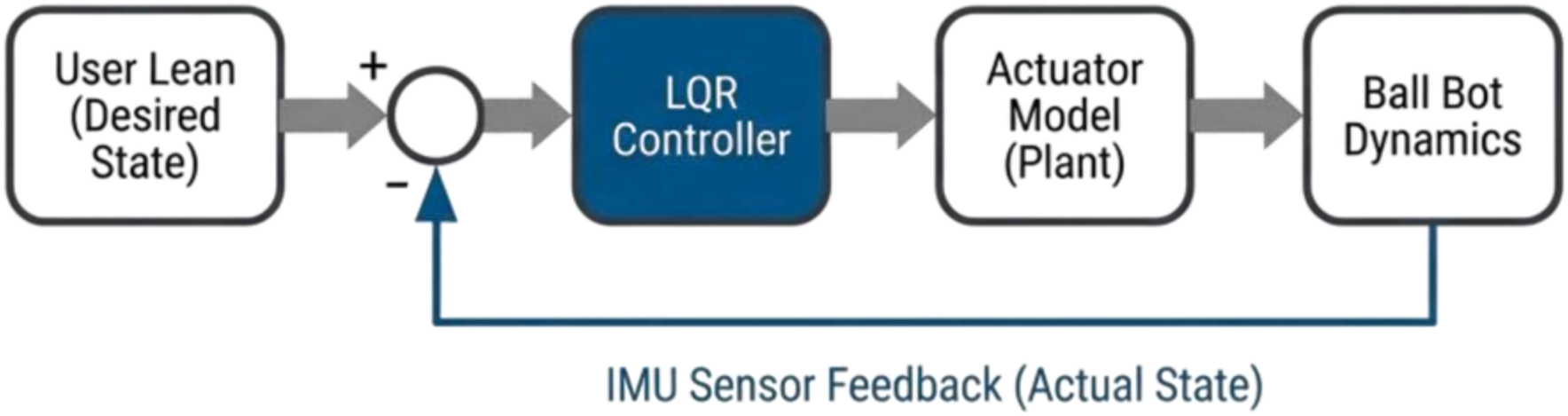

Chosen Method: A Linear-Quadratic Regulator (LQR) state-space approach.

Why LQR?

- **Optimal for MIMO Systems**: Ideally suited for managing multiple inputs (motor torques) and outputs (position, orientation).
- **Tunable Performance**: Allows us to precisely tune the trade-off between aggressive responsiveness and smooth energy consumption.
- **Guaranteed Stability**: Provides a mathematically proven guarantee of stability for our linearized model.

Refine the Controller in a Realistic Virtual World.

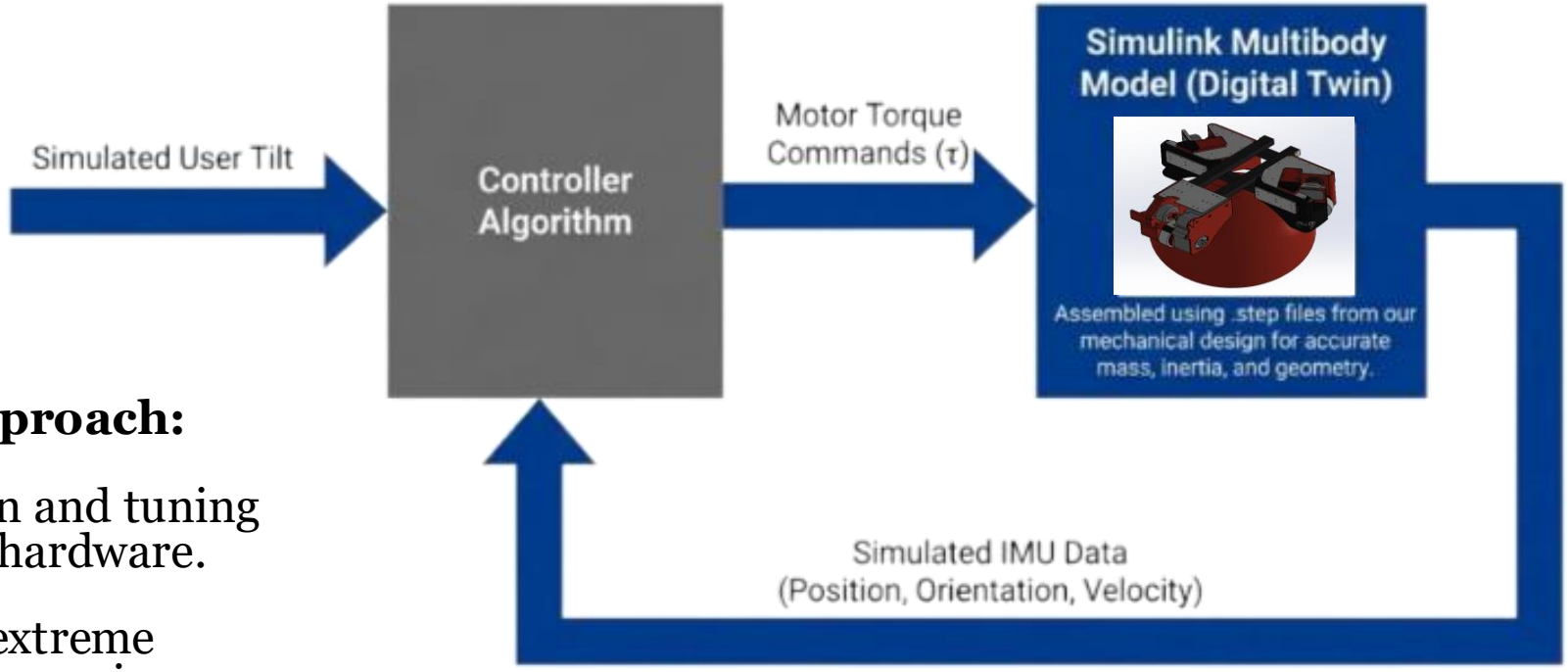

Key Benefits of This Approach:

- Allows for rapid iteration and tuning without risk to physical hardware.
- Enables safe testing of extreme maneuvers and failure scenarios.
- Ensures the controller is robust and reliable before physical deployment.